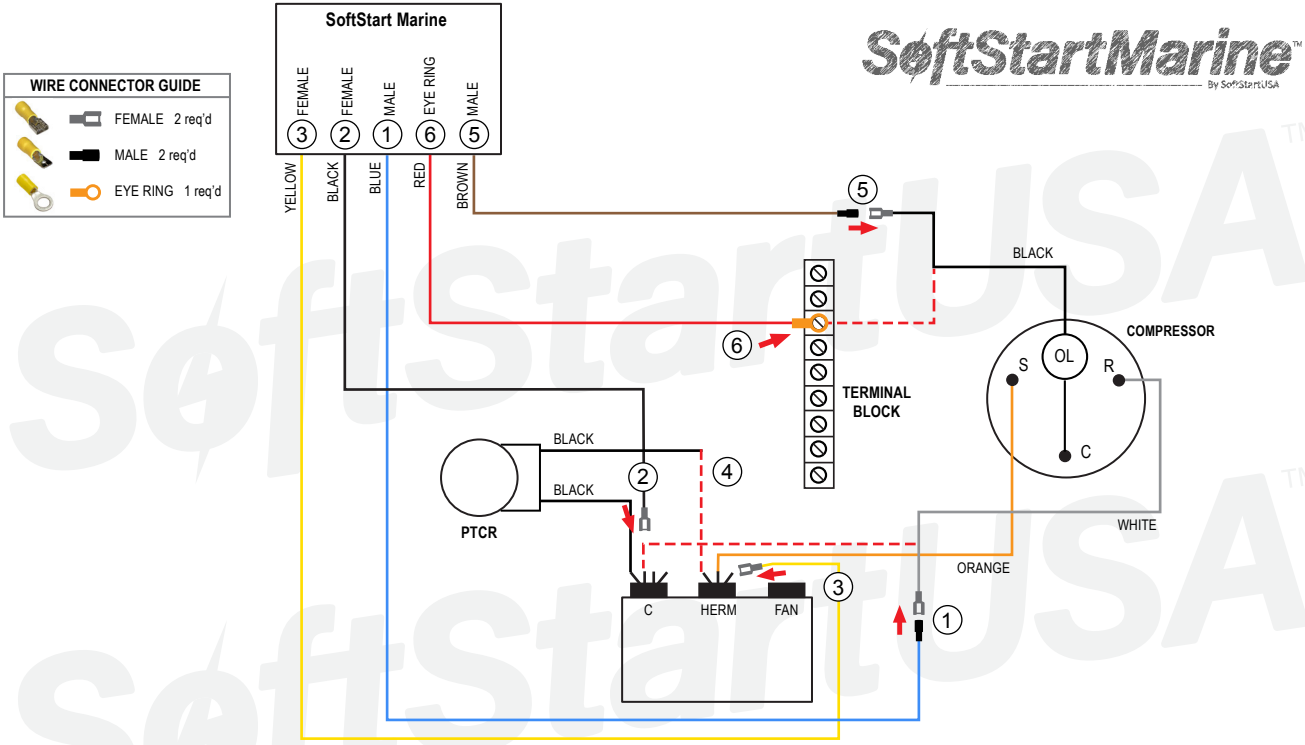

TURN ALL POWER OFF BEFORE STARTING INSTALLATION.

Route all SoftStart wires into the electrical box. Then crimp Connectors onto all SoftStart wires as indicated in drawing.

Step ① Follow White Compressor wire from Compressor to Run Capacitor "C" terminal. Disconnect from "C" terminal and connect it to Blue SoftStart wire. Tape connection with electrical tape.

Step ② Connect Black SoftStart wire to the terminal that the White Compressor wire was on.

Step ③ Connect Yellow SoftStart wire on empty terminal next to Orange Compressor wire on HERM terminal of Run Capacitor.

Step ④ If you see a Black PTCR wire next to the Orange wire on HERM terminal, disconnect it. Seal Black PTCR wire end with tape and drop it.

Step ⑤ Follow Black Compressor wire FROM the Compressor TO the Terminal Block. Disconnect Black Compressor wire and cut off Eye Ring connector. Crimp Female connector on Black Compressor wire, then connect it to Brown SoftStart wire. Tape connection.

Step ⑥ Connect Red SoftStart wire onto the Terminal Block terminal that the Black Compressor wire was on.

Secure all wires. Tape connections with electrical tape.

Turn Power and A/C Breaker on. Turn A/C to Auto Cool setting and set the thermostat as low as possible.

Look at SoftStart Marine RUN LED light (on left side). Green light should be "on". Green light means the Compressor is running (there may be a full 3-minute "Test Mode" delay before Green light comes on). **IF there is no Green light after 4 minutes**, call SoftStart Tech Support for assistance.

After establishing Green light operation, re-install all A/C covers.

Turn A/C on, set near to outdoor temperature and run for 30 minutes. After 30 minutes, operate A/C normally.

SoftStartUSA Wiring Diagram for Dometic Marine 340035 Rev A

Copyright © 2023 NetworkRV LLC. All Rights Reserved.